Specification **Sheet**

Series C

GENERAL

Chemical metering pumps shall be positive displacement, Liquifram™ type pumps that are UL and CUL approved. Output volume shall be adjustable while pumps are in operation from zero to maximum capacity of:

C10, C70, C90	- 1.3 GPH (4.9 liters per hour)
C11, C71, C91	- 2.5 GPH (9.5 liters per hour)
C12, C72, C92	- 4.0 GPH (15.1 liters per hour)
C13, C73, C93	- 8.0 GPH (30.0 liters per hour)
C14, C74, C94	- 20.0 GPH (38.0 liters per hour)
C76	- 4.0 GPH (15.1 liters per hour)
C77	- 10.0 GPH (38.0 liters per hour)
C78	- 25.0 GPH (95.0 liters per hour)

Chemical metering pumps shall be capable, without a hydraulically backed diaphragm, of injecting solutions against pressures up to:

C10, C70, C90	- 300 psig (20.7 bar)
C11, C71, C91	- 150 psig (10.3 bar)
C12, C72, C92	- 100 psig (6.9 bar)
C13, C73, C93	- 60 psig (4.1 bar)
C14, C74, C94	- 25 psig (1.7 bar)
C76	- 175 psig (12.1 bar)
C77	- 80 psig (5.5 bar)
C78	- 30 psig (2.1 bar)

TYPE C1

Adjustment shall be by means of readily accessible dial knobs, one for changing stroke length and the other for changing stroke frequency (speed). Both knobs are to be located opposite the liquid handling end.

TYPE C7

Control of Series C7 metering pumps shall be selectable between internal and external pulsing by means of a 3-position center-off switch. Stroke length shall be adjustable by means of readily accessible dial knob. When in external pulsed mode, Series C7 units shall accept signals without the use of electrical timer or internal timer. Pressure capacity shall be adjustable to reduce noise, vibration and wear.

TYPE C9

Series C9 metering pumps shall have a clear liquid crystal display. Control shall be selectable between internal and external pulsing by means of a tactile keypad. Internal stroke frequency shall be adjustable from 1 stroke per hour to 100 strokes per minute. Pressure capacity shall be keypad adjustable to reduce noise, vibration and wear. Metering pump shall be capable of dividing or multiplying pulse inputs from 1 to 999 or responding directly or inversely to a 4-20mA input signal.

DRIVE

The pump drive shall be totally enclosed with no exposed moving parts. Solid state electronic pulser shall be encapsulated and supplied with quick connect terminals at least 3/16" (4.75 mm) wide. Electronics shall be housed in chemical resistant enclosure at the rear of the pump for maximum protection against chemical spillage. Electrical power consumption shall not exceed 87 watts under full speed and maximum pressure conditions. Pump weight shall not exceed 28 lbs (12.7 kg).

AUTOMATIC PRESSURE RELIEF

To eliminate need for pressure relief valve, Liquifram™ shall automatically stop pulsating when discharge pressure exceeds pump pressure rating by not more than 35%.

MATERIAL

Chemical metering pump housing shall be of chemically resistant glass fiber reinforced thermoplastic with a glass fiber reinforced polypropylene EPU carrier[1]. All exposed fasteners shall be stainless steel. Chemical metering pump valves shall be ball type, with ceramic balls[2]. Valve seat and seal ring shall be renewable by replacing the combination seat-seal ring[3] or cartridge valve assembly. Pump head shall be of transparent acrylic[4] material capable of resisting the pumped chemical. Fittings and connections at pump head shall be PVC[5].

CHECK VALVES AND TUBING

A total of 16 ft (4.8 m) of polyethylene tubing[6] shall be provided per pump complete with compression connections. A foot valve with integral one piece strainer shall be provided for the suction line, and an injection check/back pressure valve with ½" NPT male connection for the injection point. The injection check valve shall incorporate a dilating orifice which prohibits scale formation and accumulation of crystalline deposits.

Notes:

1. With plastic coated cast iron EPU carrier for Series C 76, C77 and C78.
2. Type 316 stainless steel or PTFE may be specified.
3. Hypalon®, PTFE, Viton® or Polyprel® may be specified.
4. PVC, Polypropylene, PDVF or Type 316 stainless steel may be specified.
5. PVDF, Polypropylene, or Type 316 stainless steel may be specified.
6. 6 ft. (1.8 m) of vinyl suction tubing may be specified in place of polyethylene for the suction side only. 1/4" or 1/2" male pipe thread may be specified.

LMI MILTON ROY

8 Post Office Square
Acton, MA 01720 USA
TEL: (978) 263-9800
FAX: (978) 264-9172
http://www.lmipumps.com

Replaces same of Rev. C 12/99
1619. D 6/01

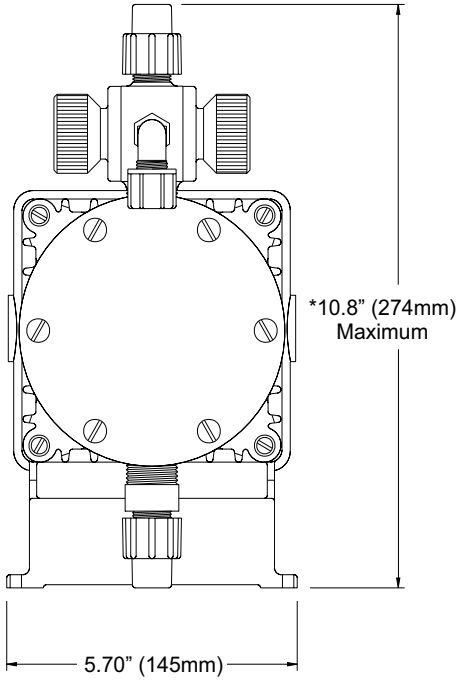

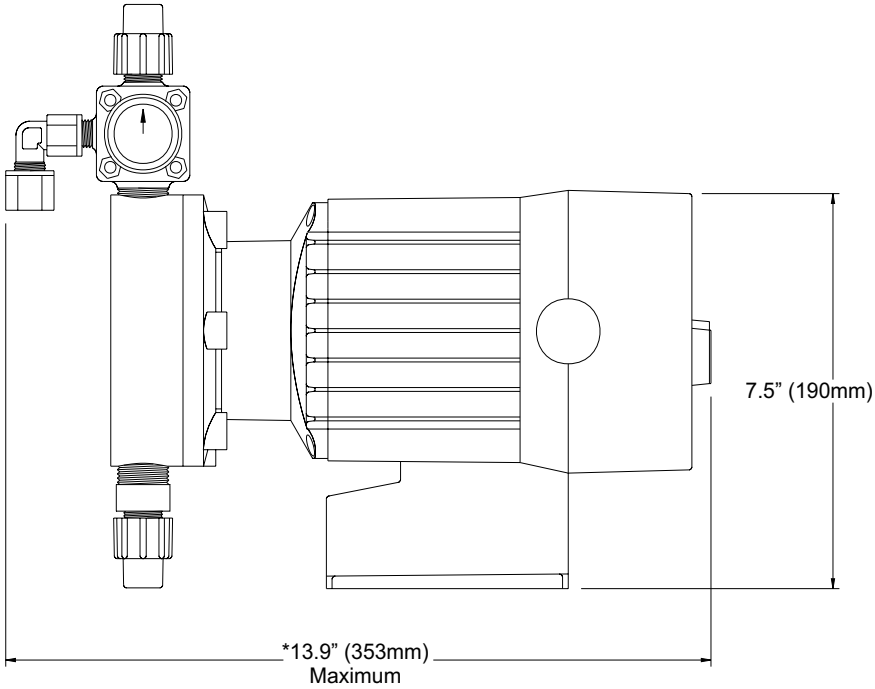

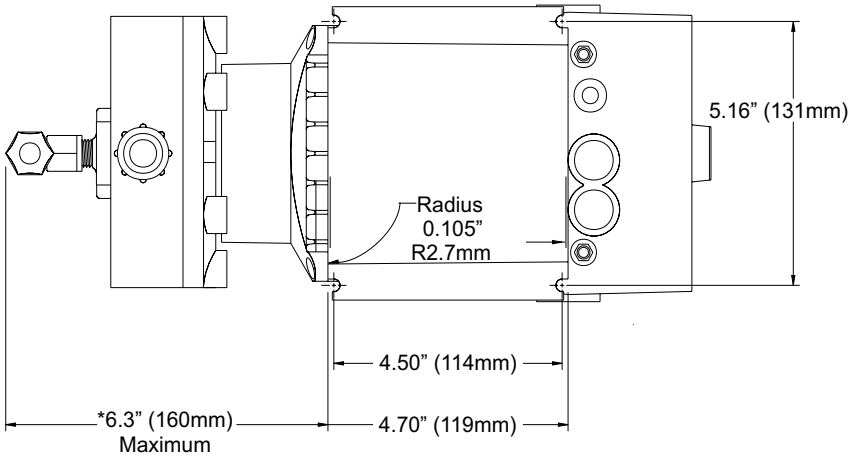

*Dimensions shown are maximum for largest liquid end available.These dimensions vary depending on the liquid end selected.

© 2001 LMI Milton Roy - All Rights Reserved
Printed in USA
Specifications subject to change without notice.

Polyprel is a registered trademark of Liquid Metronics Incorporated
Liquifram is a trademarks of Liquid Metronics Incorporated
Hypalon and Viton are registered trademarks of E. I. du Pont de Nemours & Co., Inc.