J.L. WINGERT CO.

GLYCOL FEED SYSTEMS

OPERATION & MAINTENANCE MANUAL

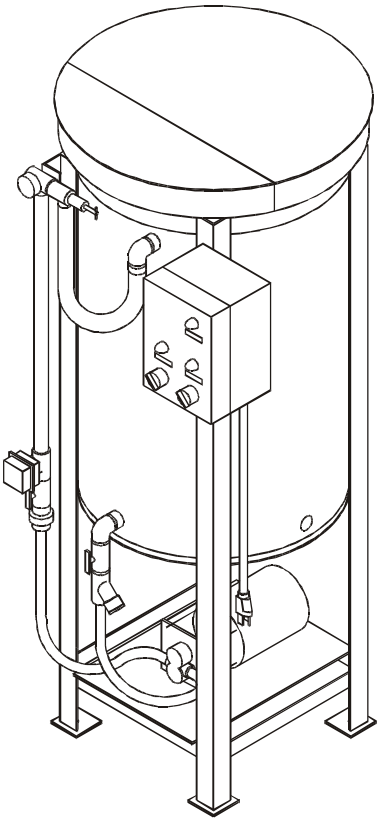

PLEASE RECORD THE FOLLOWING DATA

(Information is located on the product label or packing slip)

Model Number: _____

Date Code: _____

Installation Date: _____

Installation Location / Application: _____

_____

_____

The above information will help when ordering replacement parts and accessories for your Wingert Glycol Feed System.

MANUFACTURING: *Mixers, Bypass Feeders, Filter Feeders, Bromine Feeders, Sample Coolers, Sludge Traps, Separators, Separator Systems, Tank Stands, Tank Package Systems, Glycol Feed Systems, Coupon Racks, Control Stations, NEMA Enclosures, Custom Packaged Systems and Specialty Welding*

P.O. Box 6207 • Garden Grove, CA 92846-6207 / 11800 Monarch St. • Garden Grove, CA 92841-2113 • Phone (714) 379-5519 • Fax (714) 379-5549
Northern California Region • (510) 487-5310 ■ Southwest Region • (602) 470-1015 ■ Email: customerservice@jlwingert.com • www.jlwingert.com

O&M Manual
INT1622.G 7/03

CONTENTS: **PAGE**

1.0 INTRODUCTION	1
2.0 WARRANTY	1
3.0 UNPACKING	1-2
4.0 LOCATION AND ENVIRONMENT	3
5.0 INSTALLATION	3
6.0 SETTING THE PRESSURE SWITCH	4
7.0 PRESSURE AND TEMPERATURE LIMITATIONS	4
8.0 ADJUSTING FOR PRESSURE REQUIREMENTS	5
9.0 MAINTENANCE	5-6
10.0 PARTS LISTING	7
PRESSURE SWITCH (EXPLODED VIEW)	7
NEMA CONTROL PANEL (DETAIL)	7
GEAR PUMP (EXPLODED VIEW)	8
PRESSURE RELIEF VALVES (EXPLODED VIEW)	9
GLYCOL SYSTEM (OVERVIEW)	10
11.0 TROUBLESHOOTING	11

1.0 INTRODUCTION

These heavy duty automated systems deliver a comprehensive package at a modest cost. With two standard models and a long list of custom options, Wingert Glycol Feed Systems offer the flexibility of varying pressure control ranges, tank and pump sizes, instrumentation and much more.

2.0 WARRANTY

Wingert Glycol Feed Systems are guaranteed for one year from the date of shipment against manufacturing defects in material and workmanship which develop in the service for which they are designed. We will repair or replace a defective glycol feed system when returned to our factory with transportation prepaid: providing that the glycol feed system is found to be defective upon inspection. We assume no liability for labor and/or other expenses in making repairs or adjustments. All replacements will be F.O.B. factory.

3.0 UNPACKING

Do not store outdoors. *Prior to unpacking the Wingert Glycol Feed System, please make sure that the exterior packaging is free from damage. Unpack and inspect the interior for any damage. If damage is detected and not noted with the freight carrier, contact the factory immediately for assistance.*

NOTE: You only have 3-5 days after receipt of goods to file a freight claim.

3.1 CHECKLIST

In order to verify receipt of your product, use the following table and model number to identify the contents.

MODEL NUMBER				
GL50	-E	1	-1	/B

OPTIONS	
B	95 decibel, audible alarm and silence switch
C	Remote dry contact on low level (PLC interface)
HTM	Steel high temperature manifold on discharge side of pump

PRESSURE RANGES				
	MFG #	CUT-IN	CUT-OUT	PSID
1*	FSW29	10-45	20-50	10-30
2	GHG2	40-80	65-100	20-40
3	FSW42	3-10	9-30	6-20

MFG # IS LOCATED INSIDE THE PRESSURE SWITCH COVER

PUMPS	
1	1/3 hp pump, 1.6 GPM @ 100 psi
2	1/2 hp pump, 3.6 GPM @ 100 psi
X	No pump (1/2" MNPT hose connections)

MODELS	
E	Economy model with polyethylene tank, back pressure relief valve, cast iron strainer, PVC check valve, side entry low level switch and polyethylene hinged cover
2E	Dual economy model with back pressure relief valve, cast iron strainer, PVC check valve, side entry low level switch and polyethylene hinged cover
H	High temperature model with carbon steel tank, brass pressure relief valve, cast iron strainer, steel check valve, side entry low level switch and steel hinged cover

BASE / GALLONS	
GL50	Glycol feed system with 50 gallon tank and tank stand

** Pressure code which is the standard factory setting. Other settings available upon request.*

NOTE: Custom systems are offered when your needs are not met by the listed standard model numbers. Check inside the control panel for the design pressure settings on a custom system, or consult the factory for assistance (714) 379-5519.

• • • • • • • WARNING • • • • • • • •

- PERSONNEL SAFETY PRACTICES SHOULD APPLY AT ALL TIMES

- SAFETY GLASSES, FACE SHIELDS AND PROTECTIVE GLOVES SHOULD BE WORN

- DO NOT SERVICE THE GLYCOL FEED SYSTEM WITHOUT DISCONNECTING POWER

- CLOSE ISOLATION VALVE AND RELEASE ALL PRESSURE BEFORE SERVICING ANY COMPONENTS ON THE SYSTEM

- ALL LIQUIDS LEFT IN LINE SHOULD BE DRAINED BEFORE SERVICING

4.0 LOCATION AND ENVIRONMENT

Although the control box is NEMA 4X, the gear pump motor is an open motor and comes with a NEMA 15R power cord. Wingert Glycol Feed Systems should be installed indoors in a dry, covered location and should not be exposed to direct weather conditions. Do not store outdoors.

5.0 INSTALLATION

MOUNTING

1) Utilizing the four 25/64" bolt holes located at the base of each vertical support leg, firmly secure the Glycol Feed System to a level concrete pad. Be sure that the pad thickness complies with local codes.

2) Install the Glycol Feed System within 10 feet of injection point into the system or pump performance will vary.

PLUMBING

1) Install an isolation ball or gate valve at the discharge point(s) of the glycol feed system.

2) Plumb the discharge(s) 3/4" MNPT port to your system(s). This should be no more than 10 feet in distance and have no more than one right angle (otherwise pump performance may vary).

WIRING

1) Wingert Glycol Feed Systems are supplied with a 14 gauge, 115 VAC power cord. Plug the Glycol Feed System into a 115 VAC, 15 amp minimum receptacle (dual systems require 30 amps).

HARDWIRING *(See detail below)*

1) Install a power disconnect box on the wall.

2) Connect power from disconnect box to glycol feed system, be sure that all wiring complies with local codes.

3) Wire control panel power to the first three terminals on control starting from the left side.

#1 green = ground, #2 white = neutral (5 volts to ground), #3 black = hot (110 V to ground)

4) OPTIONAL - wire remote low level indicator to the last two terminals of the terminal block from the left side.

#1 green = ground, #11 white = neutral (5 volts to ground), #12 orange = hot (110 V to ground)

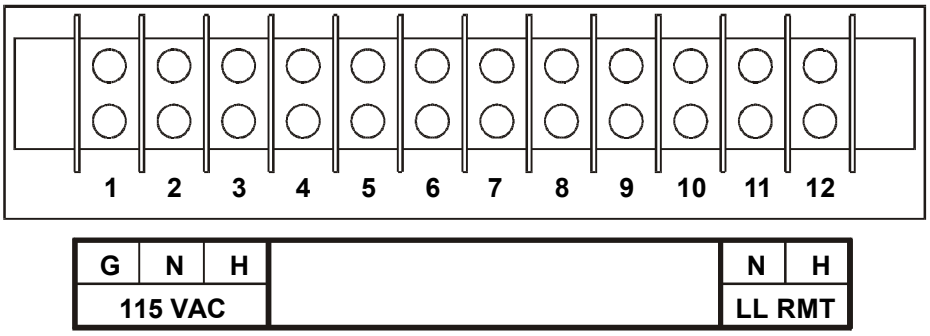

J.L. WINGERT CO.

6.0 SETTING THE PRESSURE SWITCH

FACTORY STANDARD SETTINGS *(See page 7 for parts locations)*
1) Pressure relief valve(s): Maximum pressure switch setting
2) Pressure switch(es): Cut-in set to minimum and pressure differential set to maximum

HOW TO ADJUST THE PRESSURE RELIEF VALVE
1) Brass Pressure Relief Valve(s): Turning the adjustment handle counterclockwise will decrease the relief pressure.
2) PVC Pressure Relief Valve(s); Turning the tamper resistant insert (with a pair of needle nose pliers or adjustment wrench) counterclockwise will decrease the relief pressure.

HOW TO ADJUST THE PRESSURE SWITCH (SQUARE D MODELS)
1) Turning the large keep nut (cut-in adjuster #4) clockwise will increase the pressure switch cut-in setting.
2) Turning the small keep nut (pressure differential #5) counterclockwise will decrease the pressure differential setting.

7.0 PRESSURE AND TEMPERATURE LIMITATIONS

MATERIAL	MAXIMUM SHORT TERM TEMPERATURE	MAXIMUM OPERATING TEMPERATURE	MAXIMUM OPERATING PRESSURE
Polyethylene (PE)	160° F / 69° C	85° F / 36° C	N/A
Polyvinylchloride (PVC)	140° F / 60° C	85° F / 36° C	100 psi / 6.9 Bar
Polypropylene (PP)	180° F / 77° C	85° F / 36° C	N/A
Carbon Steel (CS)	200° F / 93° C	85° F / 36° C	100 psi / 6.9 Bar
Cast Iron (CI)	200° F / 93° C	85° F / 36° C	100 psi / 6.9 Bar
Brass (BR)	200° F / 93° C	85° F / 36° C	100 psi / 6.9 Bar

NOTE: Minimum fluid temperatures 50° F / 10° C

8.0 ADJUSTING FOR PRESSURE REQUIREMENTS

(See page 7 for parts locations, repeat steps 2 thru 10 for dual systems)

1) Isolate the glycol feed system from the makeup line by use of an isolation valve.

2) Remove pressure switch cover. Be sure to keep objects from interfering with the closing or moving parts in the pressure switch.

3) Turn the glycol feed system power on and ensure that the glycol tank is full.

4) Turn the pump selector switch to the hand, or "H", position.

5) While the glycol feed system is recirculating, adjust the pressure relief valve to the glycol feed system cut-in or on setting.

6) Adjust the cut-in adjuster (#4) until the pressure switch closes.

7) Adjust the pressure relief valve to the cut-out (or off) position.

8) Adjust the pressure differential adjuster (#5) until the pressure switch opens.

9) Adjust the pressure relief valve to the maximum system pressure.

10) Turn the pump selector switch to the off position.

11) Shut off the glycol feed system power and open the isolation valve.

12) Replace the pressure switch cover.

13) After the glycol feed system pressurizes, check the setting on the pressure relief valve. If the setting is less than the maximum system pressure, the potential for backflow exists. Readjust as needed.

14) Turn the system power on, and turn the pump selector switch to automatic or "A".

9.0 MAINTENANCE

Maintenance and care will depend upon the usage and environment in which the glycol feed system is subjected to. The following is the suggested regular maintenance required to keep the glycol feed system operating properly.

TANK AND PLUMBING

Routine Maintenance: *Periodic checking of the piping and tubing is required to insure proper discharge of the glycol solution. The Y-strainer and check valve should be periodically checked for clogging and wear.*

GEAR PUMP

Routine Maintenance: *The pump should be checked for proper operation. If any pump/motor noises, leaks or changes in operation are detected, the pump should be removed and examined by a certified technician. Gear pump repairs can be difficult and should only be attempted by qualified personnel. Improper repairs or assembly can result in pump failure and nullification of the warranty.*

Lubrication: *Carbon bearing motors do not require lubrication, however sleeve bearing motors do. Follow the lubrication instructions that are provided on the motor label. If there are no instructions, lubricate once a year with 10 to 15 drops of SAE 20 weight non-detergent or electric motor oil. Do not over lubricate.*

Disassembly and Reassembly: *(Refer to page 8 for exploded view)*
1) Remove screws (#7) *and housing* (#1) *with gasket* (#2).
2) Shafts (#4 & #5) *can be removed.*
3) Inspect all parts for excessive wear or damage and replace parts as needed.
4) Reassemble pump in reverse order of disassembly - tighten screws evenly in opposing sequence to assure cover to body alignment.

NOTE: *Gasket should be replaced at every disassembly.*

PRESSURE SWITCH

Routine Maintenance: *The only maintenance required is a periodic check for wear on the contacts. Contacts should be replaced if damaged or worn.*

Disassembly and Reassembly: *(Refer to page 7 for exploded view)*
1) Remove wires from terminal block, note placement.
2) Unscrew pressure switch from discharge line.
3) Remove the six diaphragm screws (#7).
4) Remove the two contact block screws (#8).
5) Reassemble pressure switch in reverse order of disassembly.

PVC PRESSURE RELIEF VALVE

Routine Maintenance: *Periodic checking and replacement of the diaphragm is the only maintenance required. The PVC pressure relief valve is designed so the diaphragm can be maintained without removing the valve from the line.*

Disassembly and Reassembly: *(Refer to page 9 for exploded view)*
1) Note the position of the adjustment screw and back it out until all the pressure is released.
2) Remove the four cap nuts (#8).
3) Lift off the valve cap (#2).
4) Inspect diaphragm (#3) *and replace as needed.*
5) Inspect and replace pressure spring (#5) *as needed.*
6) Reassemble relief valve in reverse order of disassembly.

BRASS PRESSURE RELIEF VALVE

Routine Maintenance: *Periodic checking and replacement of the adjustment seal is the only maintenance required. The brass pressure relief valve must be removed from the line for servicing.*

Disassembly and Reassembly: *(Refer to page 9 for exploded view)*
1) Note the position of the adjustment screw and back it out until all the pressure is released.
2) Unscrew the pressure relief valve from the discharge line.
3) Unscrew the valve seat (#13) *and remove the relief plunger* (#15)*, small spring* (#17) *and large spring* (#18).
4) Back off adjustment screw (#14) *and lock nut* (#16) *until it is completely removed from the valve body* (#12).
5) With a long, thin screwdriver, push the adjustment seal (#19).
6) Reassemble relief valve in reverse order of disassembly.

10.0 PARTS LISTING

PRESSURE SWITCH

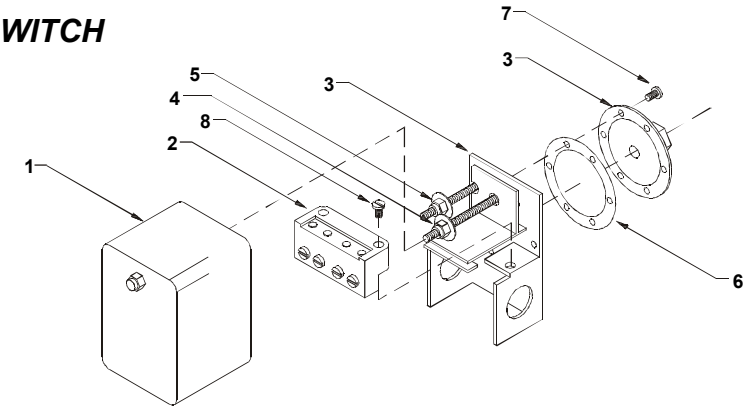

KEY	DESCRIPTION
1	Plastic cover, glass filled polycarbonate
2	Contact block
3	Pressure switch and back plate, 1/4" FNPT, zinc plated gauge steel
4	Cut-in (or on setting) adjustment screw
5	Cut-out (or off setting) adjustment screw
6	Pressure bladder, Nitrile (butadiene) rubber
7	Diaphragm screw
8	Contact block screw

NEMA CONTROL BOX

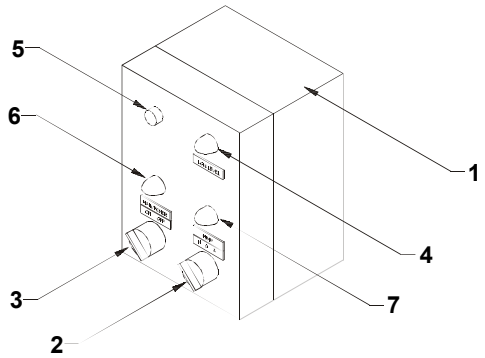

KEY	DESCRIPTION
1	NEMA 4X, polycarbonate control box
2	Main power switch, 2 positions (ON/OFF), terminates voltage to all components
3	Pump power switch, 3 positions (ON/OFF/AUTO), select pump mode *(Double for dual models)*
4	Red low level indicator light
5	15 amp fuse and fuse holder
6	Green pump power indicator light (on only when pump is pumping)
7	Green main power indicator light *(Double for dual models)*

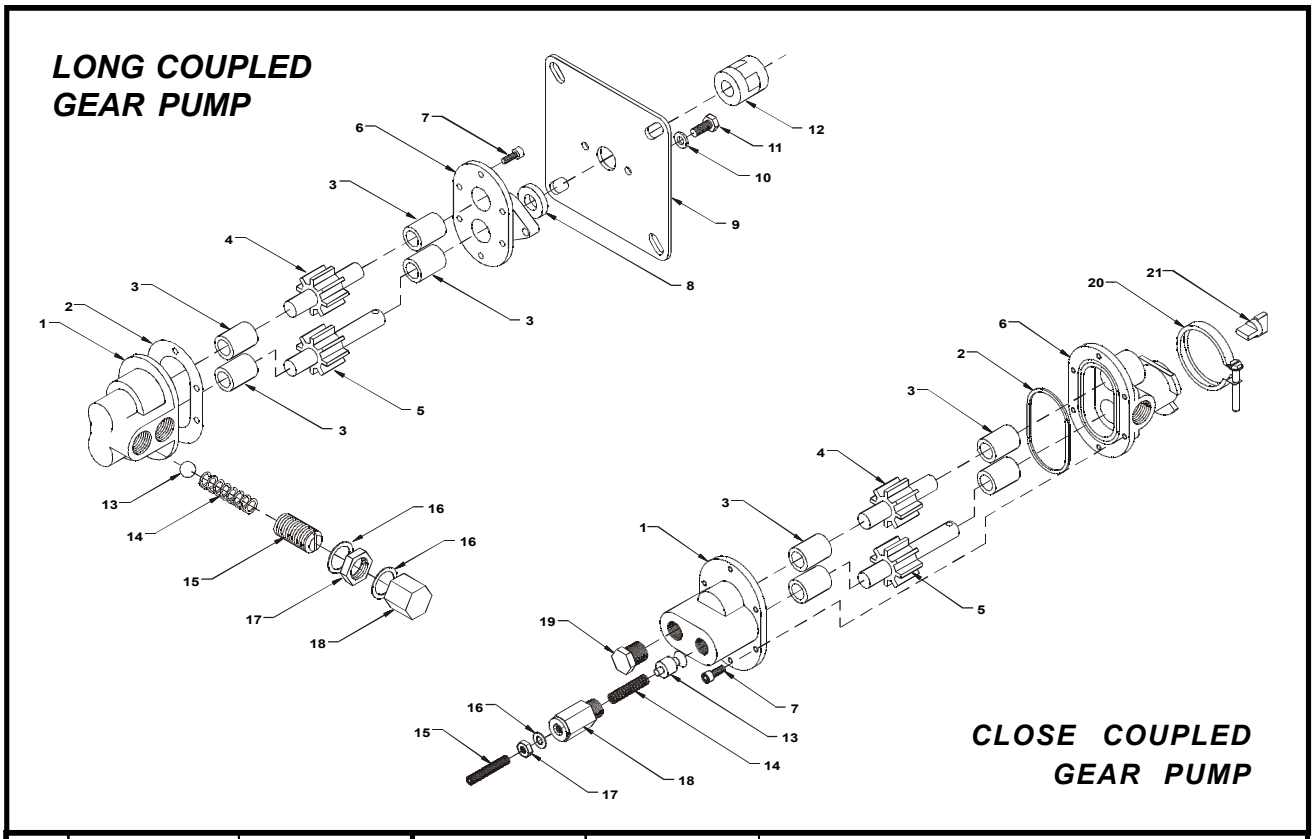

KEY	LONG COUPLED 1/3 HP		LONG COUPLED 1/2 HP		CLOSE COUPLED 1/3 HP		CLOSE COUPLED 1/2 HP		DESCRIPTION
	PART #	QTY.	PART #	QTY.	PART #	QTY.	PART #	QTY.	
1	1640-01	1	1640-16	1	1640-101	1	1640-116	1	Pump housing assembly, includes bearings
2	1640-02	1	1640-02	1	1640-102	1	1640-102	1	Pump head gasket /o-ring
3	1640-03	4	1640-03	4	1640-103	4	1640-103	4	Carbon bearings
4	1640-04	1	1640-17	1	1640-104	1	1640-117	1	Drive gear and shaft assembly
5	1640-05	1	1640-18	1	1640-105	1	1640-118	1	Drive gear and shaft assembly
6	1640-06	1	1640-06	1	1640-106	1	1640-106	1	Body assembly, includes bearings
7	1640-19	6	1640-22	6	1640-22	6	1640-22	6	#10-24 x 1/2" machined head screw
8	1640-07	1	1640-07	1	---		---		Buna-N lip seal
9	1640-08	1	1640-08	1	---		---		Mounting plate
10	1640-20	4	1640-23	4	---		---		1/4" lock washer
11	1640-21	4	1640-24	4	---		---		1/4-20 x 5/8" steel cap screw
12	1640-09	1	1640-09	1	---		---		Flexible coupling with spider gear
13	1640-10	1	1640-10	1	1640-110	1	1640-110	1	Check valve
14	1640-11	1	1640-11	1	1640-111	1	1640-111	1	Relief valve spring
15	1640-12	1	1640-12	1	1640-112	1	1640-112	1	Valve stem adjuster screw
16	1640-13	2	1640-13	2	1640-113	2	1640-113	2	Valve stem gasket
17	1640-14	1	1640-14	1	1640-114	1	1640-114	1	Valve stem lock nut
18	1640-15	1	1640-15	1	1640-115	1	1640-115	1	Valve stem cap
19	---		---		1640-130	1	1640-130	1	1/2" NPT brass pipe plug
20	---		---		1640-131	1	1640-131	1	Mount ring
21	---		---		1640-132	1	1640-133	1	Gear coupler

PRESSURE RELIEF VALVES

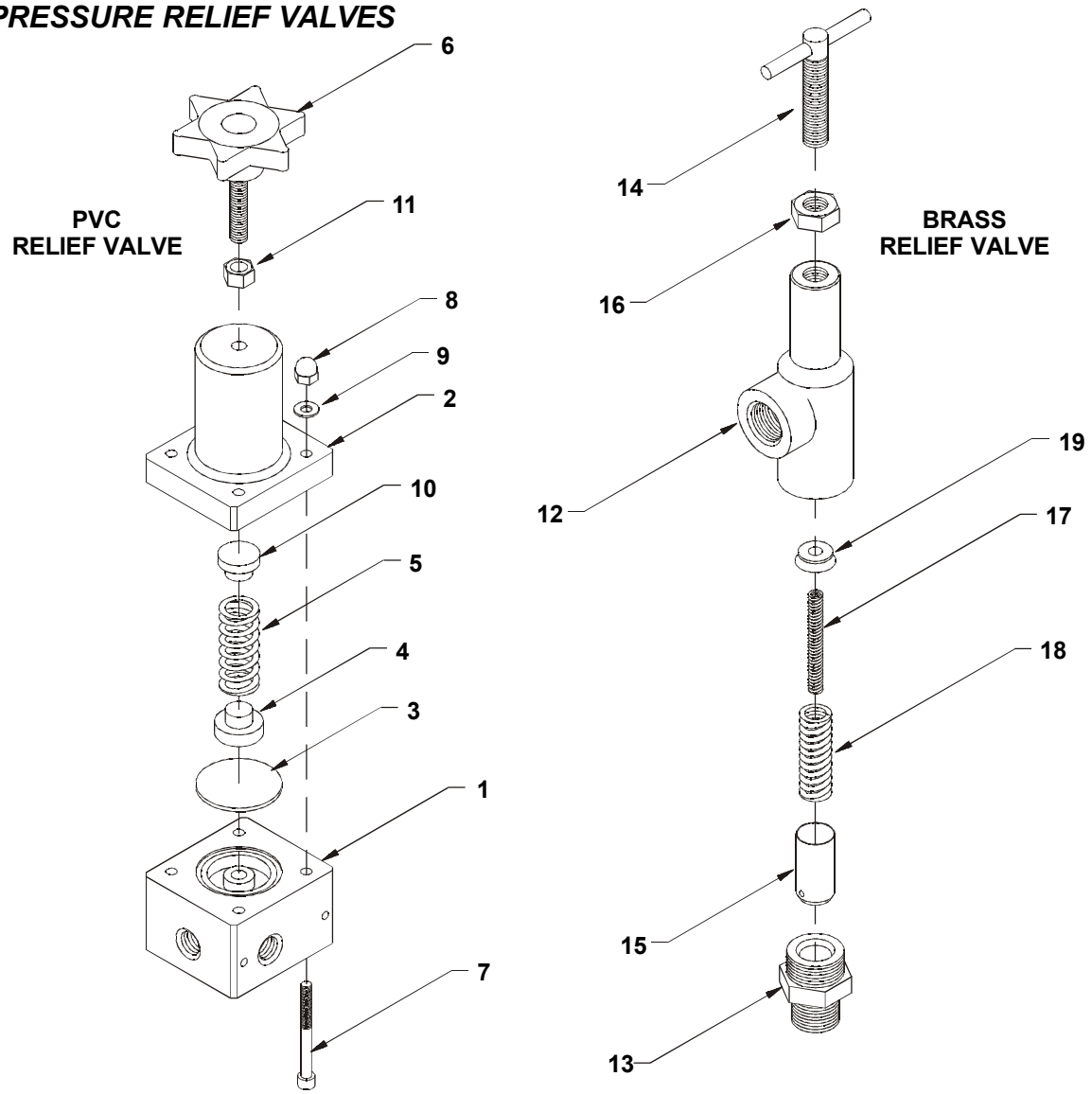

PVC PRESSURE RELIEF VALVES		BRASS PRESSURE RELIEF VALVES	
KEY	DESCRIPTION	KEY	DESCRIPTION
1	Pressure relief valve body, PVC	12	Valve body, brass
2	Pressure relief valve cap, PVC	13	Valve seat, 1/2" NPT, brass
3	Diaphragm, teflon	14	Adjustment screw, brass
4	Disc support, polypro, lower	15	Relief plunger, brass
5	Pressure spring	16	Lock nut, brass
6	Adjustment screw, PVC	17	Small spring, carbon steel
7	1/4-20 x 1 3/4" allen head bolt, SS	18	Large spring, carbon steel
8	1/4-20 cap nut, SS	19	Adjustment seal, brass / neoprene
9	1/4 flat washer		
10	Disc support, polypro, upper		
11	Adjustment lock nut		

GLYCOL SYSTEM

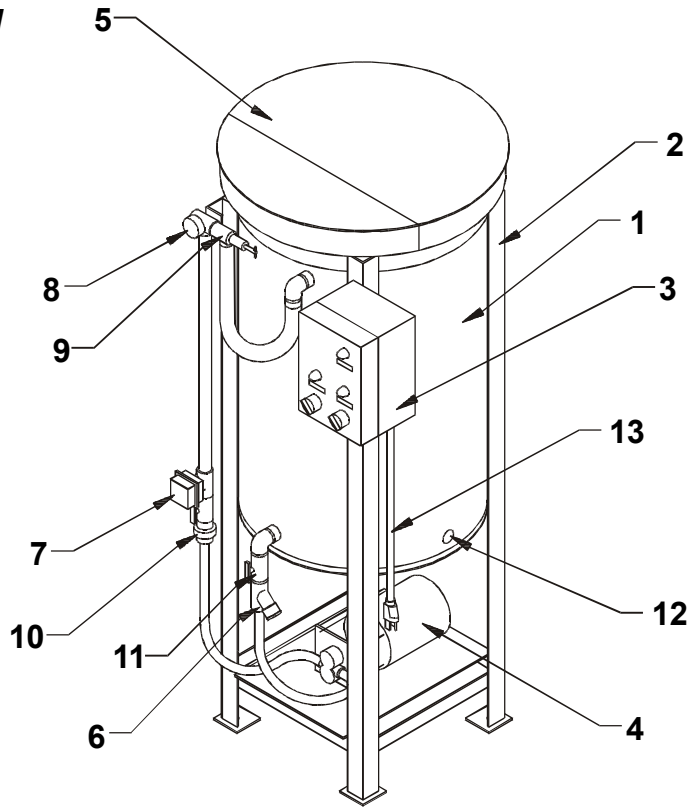

KEY	GL50-E	GL50-2E	GL50-H	DESCRIPTION
1	PE55	PE55	1640-80	50 gallon tank
2	1640-64	1640-66		Bottom mount stand
3	1640-67	1640-68	1640-67	NEMA 4X control box, polycarbonate
4*	1640-529	1640-529	1640-529	1/3 HP, 115V gear pump, 1.3 GPM @ 100 PSI bronze
	1640-539	1640-539	1640-539	1/2 HP, 115V gear pump, 3.0 GPM @ 100 PSI bronze
5*	CVR55-H	CVR55-H	1640-69	Hinged cover
6*	1626-005-CS	1625-005-CS	1626-005-CS	Y-strainer
7*	1640-53	1640-53	1640-53	Pressure switch, pressure code #1, 10-45 PSI, (cut-in)
	1640-54	1640-54	1640-54	Pressure switch, pressure code #2, 40-80 PSI, (cut-in)
	1640-55	1640-55	1640-55	Pressure switch, pressure code #3, 3-10 PSI, (cut-in)
8*	1640-56	1640-56	1640-56	Pressure gauge, pressure code #1, 0-60 PSI
	1640-57	1640-57	1640-57	Pressure gauge, pressure code #2, 0-100 PSI
	1640-58	1640-58	1640-58	Pressure gauge, pressure code #3, 0-25 PSI
9*	TVBP25-PVC	TVBP25-PVC	1640-540	Pressure relief valve, 15-50 PSI
			1640-541	Pressure relief valve, 50-100 PSI
			1640-542	Pressure relief valve, 0-20 PSI
10*	1640-60	1640-60	1640-71	Check valve
11*	1625-005-PVC	1625-005-PVC	1625-005-BR	Ball valve
12	1640-62	1640-62	1640-62	Low level switch, polypropylene float
13	1640-65	1640-65	1640-65	Power cord and fuse

NOTE: Parts listing is not intended for custom glycol feed systems or models with optional features. Please consult factory for replacement parts on these systems.
** Double for dual models*

11.0 TROUBLESHOOTING

PROBLEM	POSSIBLE CAUSE
Low flow rate	Piping / equipment is dirty or fouled
	Discharge is restricted or undersized
	Worn gears (consult factory)
Pump runs, but no fluid	Faulty or plugged suction piping
	Pump Suction valve closed
	Wrong pump rotation
Pressure is low	Line restrictions
	Worn gears
Pump starts and stops pumping	Worn / fouled gears
	Leak in suction line
	Faulty or plugged suction piping
Excessive noise while pump is in operation	Improper installation or head alignment
	Pump not secured to pump mount plate
	Piping not supported to relieve stress on pump head
Pump does not shut off at low level	Float switch is stuck, defective or damaged
	Low level relay is stuck, defective or damaged
	Incorrectly wired, consult wiring diagram
System does not relieve pressure properly	Pressure relief valve clogged
	Pressure relief valve is set improperly
Pump cycles on and off, repetitively	Piping leak on discharge side
	Pressure settings not adequate for system size or pressure

NOTES: _____