Instruction Manual

Series M
Motor Driven Metering Pumps

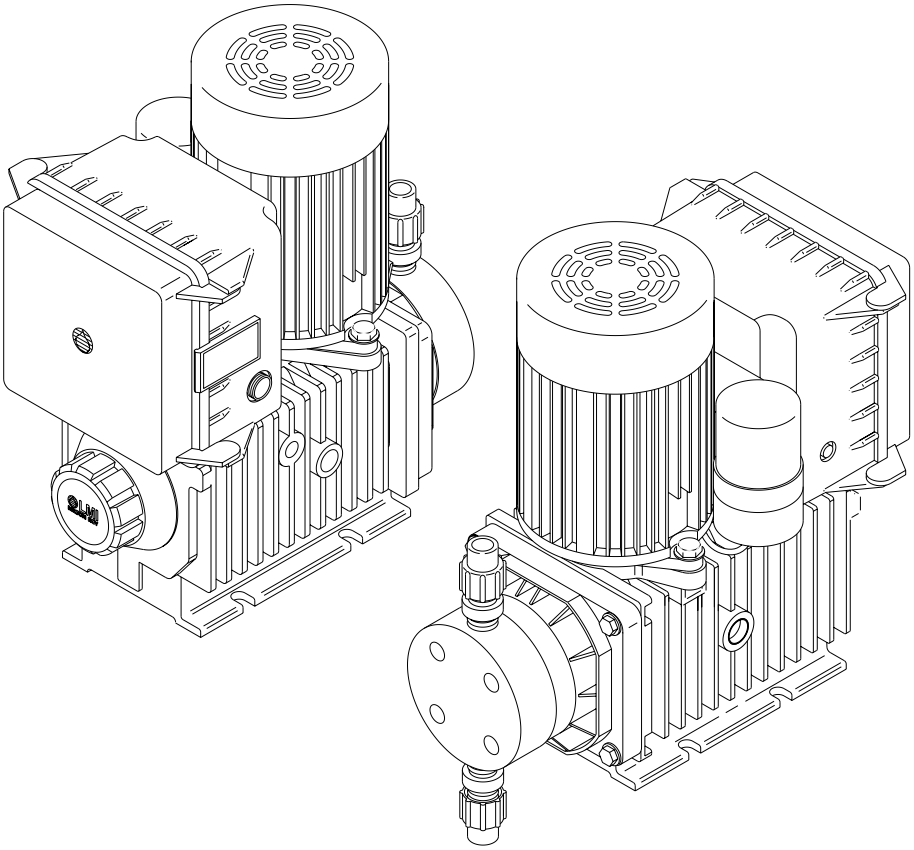

For file reference, please record the following data:

Model No: _____

Serial No: _____

Installation Date: _____

Installation Location: _____

When ordering replacement parts for your LMI Metering Pump or accessory, please include the complete Model Number and Serial Number of your unit.

LMI
MILTON ROY

8 Post Office Square
Acton, MA 01720 USA
TOLL FREE: (800) 564-1097
TEL: (978) 263-9800
FAX: (978) 264-9172
http://www.lmipumps.com

1959.A 3/02

Important Information

Lubrication	Oil, 700 ml (0.185 gal) included
Input Power	Refer to motor data plate for requirements
Tubing Connections	Do not use pipe wrenches
Suction Lift Installations	Recommended suction lift is 6 ft 91.8m) maximum
Flooded Sunction Installations	Chemical supply should be no more than 20 ft (6m) above pump
Output Adjustment	While pump is in operation, by means of stroke length knob. Recommended operating range is 10% to 100%

Contents

1.0 Unpacking 4

2.0 Installation 4
- 2.1 Location and Mounting 4
- 2.2 Electrical. 5
- 2.3 Plumbing Configuration 5
  - - Back Pressure Requirement 5
  - - Fluid Connections 6

3.0 Pump Operation 6
- 3.1 Priming 7
- 3.2 Stroke Length 7
- 3.3 Stroke Speed Adjustment 7
- 3.4 Input Signals 7

4.0 M Pump Controller Input Signal Connections 8
- 4.1 Pulse Signals 8
- 4.2 4-20 mA Analog Signals 8

5.0 Procedures Before Initial Start-up 8
- 5.1 Checking of Motor Connections 8
- 5.2 Checking of 4-20 mA Signal Input 8
- 5.3 Adjustment of Motor "On-time" 9

6.0 Operating the Controller 9

7.0 Maintenance 9
- 7.1 Lubricant Change 9
- 7.2 Liquifram Replacement 9

8.0 Spare Parts List 10

9.0 Exploded Parts View 11

10.0 Troubleshooting Guide 12

11.0 Motor Controller Troubleshooting Guide 13

1.0 Unpacking

Remove pump, injection check valve and foot valve from the carton. Notify delivery carrier immediately if there are any signs of damage to the metering pump or parts.

2.0 Installation

2.1 Location and Mounting

CAUTION

When pumping chemicals make certain that all piping is securely attached to the fittings. It is recommended that pipe lines be shielded to prevent possible injury in case of rupture or accidental damage.
Always wear protective face shield and clothing when working on or near a chemical metering pump.

All Series M pumps are motor driven and require a pressure relief valve. Contact your LMI distributor for more information.

When pumping into low or no pressure, a back pressure/anti-syphon valve should be installed to prevent over pumping. Contact your LMI distributor for more information.

1. Locate the pump in an area that is convenient to both chemical injection point and electrical supply. LMI Series M metering pumps should not be subjected to continuous high temperature (over 122° F (or 50° C)), and should be protected from rain, sleet and snow.

2. Mount the pump on a shelf directly above chemical tank. Secure pump by putting size #10 (3/16" diameter) or 5 mm diameter screws through the four holes at the edge of the pump base.

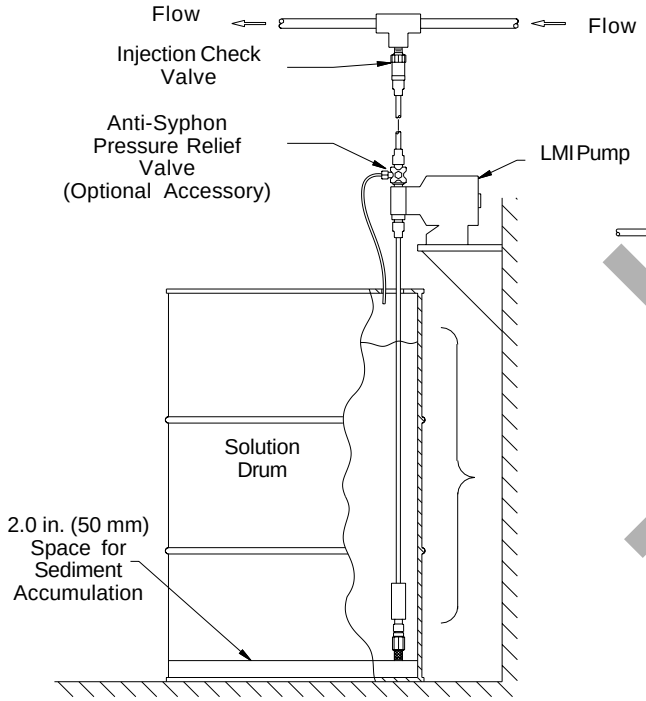

Figure 1: Suction Lift Installation

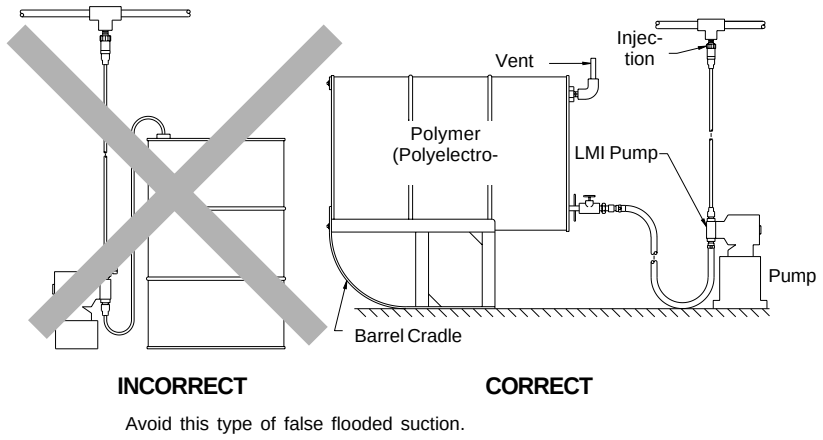

Figure 2: Avoid "False" Flooded Suction Installation

The loop at the top of the tank forms a neat air trap. In time, air and gases can bubble out, accumulate, and cause loss of prime.

2.2 Electrical Wiring Information

To reduce the risk of electrical shock, the metering pump must be plugged into a grounded outlet with ratings conforming to the specifications on the data nameplate. It must be connected to a viable ground circuit. DO NOT USE ADAPTERS (see Figure 3)! All wiring must conform to required electrical codes.

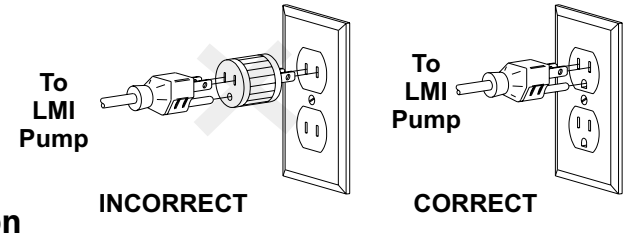

2.3 Plumbing Configuration

Figures 1, 2, 3 and 4 show typical chemical metering pump installations. Note location of injection check valve which is most important.

If chemical supply levels are over 20 ft (or 25 psi/1.72 Bar to suction side), consult factory.

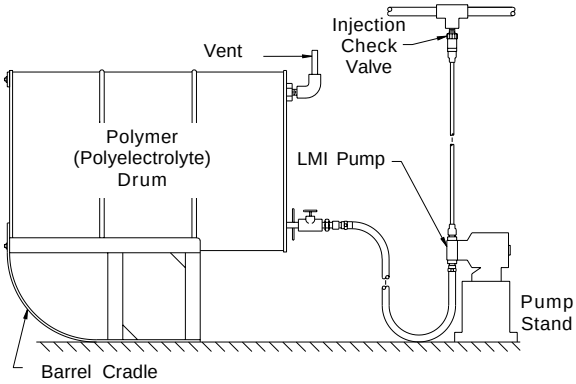

Figure 3: Flooded Suction Installation (helpful when pumping at very low rate)

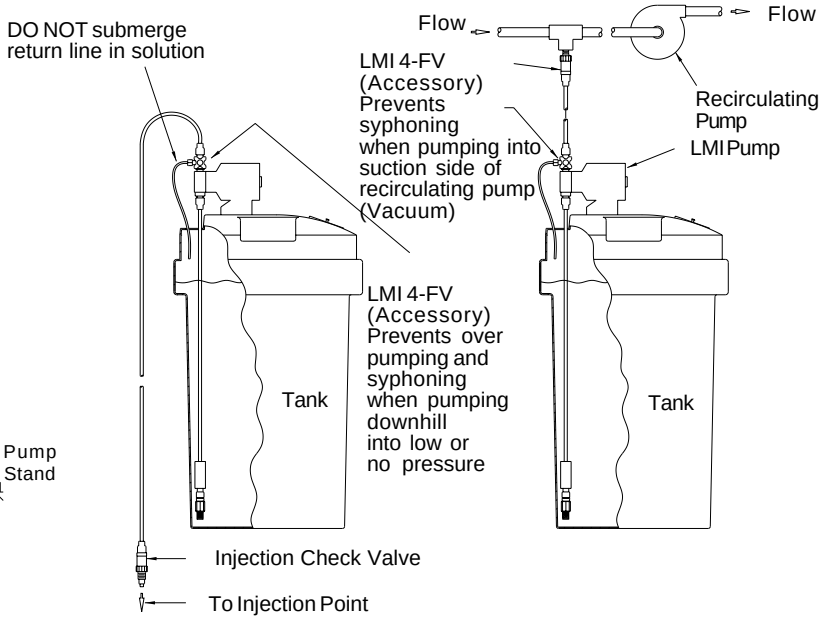

Figure 4:
Prevent Syphoning When Pumping Downhill

When pumping "Downhill" or into pump suction. Always use anti-syphon/back pressure valve at pump discharge (a) in line (b) or at injection point (c).

Back Pressure Requirement – All metering pumps are prone to overpumping (excessive output) at low discharge pressure values. Series M Pumps should be equipped (by the user) with back pressure, anti-syphon and pressure relief protection.

Fluid Connections–Series M metering pumps are equipped with male pipe connections for both suction and discharge. The following precautions should be taken:

- Pressure test all plumbing before use to guard against leaks.
- Prevent thread sealant from getting inside plumbing.
- Install a pressure relief valve in the discharge line to protect operators and equipment.
- Install a ball valve in the suction side of flooded suction installations to simplify maintenance.
- A foot valve should be used in suction lift installations to ensure ease of priming.

CAUTION

Be sure installation does not constitute a cross connection. Check local plumbing code.

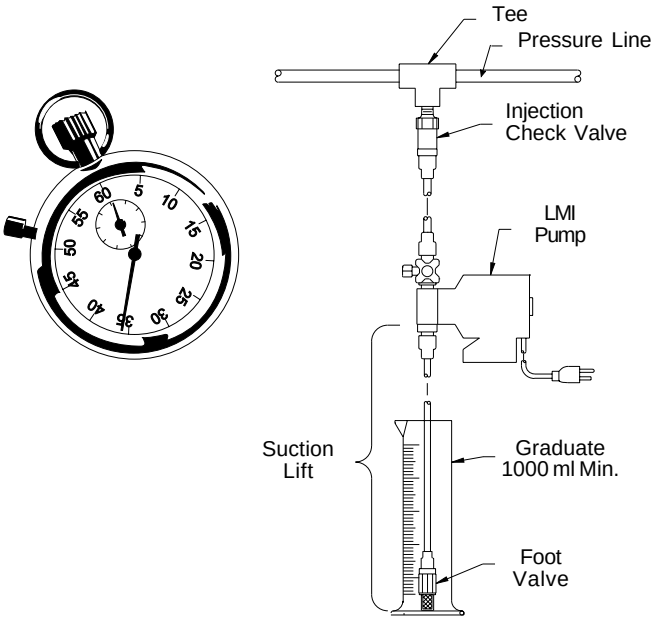

Figure 5:
Calibration Test

3.0 Pump Operation

3.1 Priming

Series M metering pumps are shipped with water in the pump head to assist in priming. Priming can be done only against atmospheric low pressure when using a suction lift installation. Flooded suction installations will allow the unit to prime itself even under low pressure. Set pump at 100% output to speed priming. In all cases, priming will be assisted by releasing or reducing pressure on the pump. This is best accomplished using an Anti-Syphon/Pressure Relief Valve.

3.2 Stroke Length Adjustment

Pump output is adjusted using the knob located opposite the liquid end. Before adjusting the pump output, make sure the pump is running. The dial on the knob represents "% stroke length" and provides good output adjustment above the 10% setting. The knob is set properly if the line on the knob lines up with the zero (0) mark on the dial when the knob is turned counter-clockwise as far as it will go. This is the zero output position. The maximum output position is reached by turning this knob fully clockwise as far as it will go. Output adjustments should be done while the unit is running. If alignment is not correct, knob position on shaft should be adjusted as follows:

1. With unit running, pry off knob.
2. Loosen knob retention screw and remove knob.
3. With a plastic or rubber jaw pliers adjust shaft until a point is reached where stroking action just ceases and can no longer be felt.
4. Place knob on shaft with pointer directly over the zero (0) mark on the dial.
5. Taking care not to move the shaft or knob alignment, tighten knob retention screw.
6. Recheck alignment results.
7. Replace knob cover.

3.3 Stroke Speed Adjustment

Models that begin with "M1" have fixed speed motors can not be adjusted. Models that begin with "M6" have an integral motor controller.

LMI's M Pump Motor Controller provides external control for your Series M Pump for applications that require flow proportional chemical feed or response to control instrumentation. The motor controller will provide one stroke from the pump for each pulse input or will provide direct proportional response to a 4-20 mA input signal.

The M Pump Motor Controller utilizes phase control technology to ‘pulse’ the motor. No special motor or drive is required. Because of variables in pumping systems, a motor ‘on-time’ feature is provided. This enables the pump to be adjusted to provide one complete stroke during each cycle. The motor controller will operate externally from 1-120 strokes per minute or internally from 5-120 strokes per minute.

3.4 Input Signals

The motor controller is supplied with a 10 ft. (3 meter) cable fitted with a 4-pin connector for connection to the external control device. The signal can be pulse type (water meter, pH meter, etc.) or analog type (4-20 mA). Only two of the four conductors will be connected as shown in the following diagram:

Pulse Input

1 : White

2 : Black

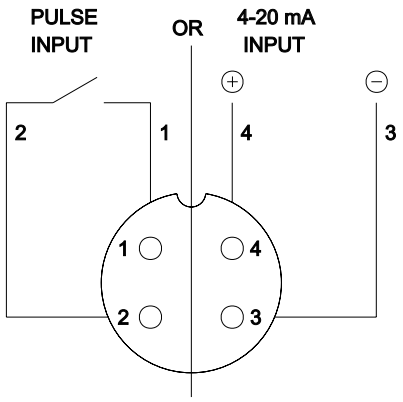

Analog Input

3 : Green (-)

4 : Red (+)

4.0 M Pump Controller Input Signal Connections

4.1 Pulse Signals

Using the input cable, connect the white and black conductors to your pulse output. There is no polarity requirement for the connection. The red and green conductors may be cut. Pulse inputs must be between 0-120 per minute.

Pulse signals must be capable of switching 15 VDC @ 8 milliamperes. Minimum time in the low impedance state (on) is 50 milliseconds. Minimum time in high impedance state (off) is 100 milliseconds.

4.2 4-20 mA Analog Signals

Using the input cable, connect the red and green conductors to your 4-20 mA analog output. Connections must be made with respect to polarity. Connect the red conductor to positive (+) and the green conductor to negative (-). The white and black connectors may be cut.

The pump will respond directly and proportionally to the 4-20 mA input.

4 mA = 0 strokes per minute (no output)

20 mA = 100 strokes per minute (max output)

The maximum distance between the M pump motor controller and the pulse or 4-20 mA source is 300 ft. (100 meters). Extension cables are available from your local LMI distributor.

In addition, if electrical noise is present, the installation of a sealed junction box and shielded two-conductor cable should be considered. Also note, cable should be routed via a separate electric raceway from the power supply.

4.3 Low Level Input (Optional)

When used in conjunction with LMI's optional low-level switch accessory (P/N 29190), pump and controller operations are interrupted when the chemical supply is low, preventing loss of prime. The "EMPTY" light on the front panel illuminates alerting the operator to replenish the chemical supply.

5.0 Procedures Before Initial Start-up

5.1 Checking of Motor Connections

Set the manual speed control knob to 30%. Set the MODE switch to INTERNAL.

Check motor rotation, it must be in accordance with the arrow stamped on the motor.

To reverse motor rotation, refer to the information contained in the motor terminal box.

5.2 Checking of 4-20 mA Signal Input

Set the MODE switch to EXTERNAL. Send an input signal and check the pump response. If the pump does not respond to the signal, verify signal polarity.

5.3 Adjustment of Motor "On-time"

Adjust the potentiometer (on-time) to setting 1.

To achieve accurate metering, it may be necessary to adjust the motor on-time to the service conditions. The higher the discharge pressure and stroke length, the longer on-time that is required.

To modify the motor on-time, adjust the potentiometer (on-time):

- from 1 to 5 to increase this time,
- from 5 to 1 to reduce this time.

This adjustment, defined for given pressure and stroke conditions may then be checked by calibration (monitoring the rate at which reagent is used).

6.0 Operating the Controller

The M pump motor controller provides a switch for operation in three modes.

INTERNAL: Operates the pump by means of the speed control knob from 5-120 strokes per minute. Light is ON when pump is under manual control.

OFF: Pump off.

EXTERNAL: Automatic and proportional control by a pulse signal (0-120 spm) or by a 4-20 mA analog signal

7.0 Maintenance

7.1 Lubricant Change

The Series M drive train is lubricated for life. There is no need for an oil change.

CAUTION

Always wear protective clothing and face shield when working on or near a chemical metering pump.

7.2 Liquifram Replacement

1. Disconnect suction supply line and shut off to prevent chemical spill.
2. Operate pump until pump head is emptied of chemical. Set output adjustment knob at 100% by turning knob fully clockwise.
3. Unplug pump.
4. Release pressure from discharge line.
5. Disconnect discharge line. Be prepared to catch excess chemical during this procedure.
6. Remove pump head by unscrewing the four head retaining screws holding the head to the spacer.
7. Plug in pump. With unit running at 100% output, unscrew and remove old Liquifram™.
8. Without changing these output settings, screw new Liquifram until it bottoms on shaft.
9. With new Liquifram installed, turn pump on and off until Liquifram is at or near its pulled back position. Reinstall pump head making sure the part number stamped on the face of the head is in upright position. Tighten the four retaining screws in a criss-cross pattern.

8.0 Series M Mechanical Metering Pump Spare Parts List

Key No.	LMI P/N	LMI Description
1	38167	Frame, Drive
2	32861	Shaft, Cross Axis
3	32862	Bushing, Shaft Axis
4	32863	Sleeve, frame stop
5	32864	Washer, .71 x 1.47
6	32865	Shaft, liquifram
7	38224	Motor, 115/230VAC, 60 HZ
7	38241	Motor, 230VAC, 50 HZ
8	38160	Cage, Gear Support
9	38157	Gear, 5.3mm Eccentric, Brass
9	38158	Gear, 7.5mm Eccentric, Brass
10	38159	Bearing, SKF 6006
11	32874	Knob, 5.3
11	38153	Knob, 7.5
12	32875	Screw , Stroke Adj.
13	38154	Flange, Motor
14	32877	Cover, Housing
15	32878	Adaptor, LMI L.E.
16	38161	Spring, LG. 3.37 O.D.
17	32880	spring, LG. 1.10 O.D.
18	32881	Housing, 'M' Pumps
19	32882	Gasket, Flange
20	32883	Pin, Spring Knob Stop
21	32884	Pin, taper oil plug
22	32885	Plug, Oil Fill
23	32886	Bolt, Motor
24	32887	Washer, Motor
25	32888	Nut, Motor
26	32889	Bolt, Cover
27	32890	Washer, Cover
28	32891	Nut, Cover
29	32892	Washer, Liq. Shft. 1.04
30	32894	Ring, Retaining Gasket
31	32895	Ring, retaining Stroke
32	32896	Cap, Shaft Axis
33	32897	Screw , Motor Flange
34	32899	Screw , Set Liq. Shaft
35	32900	O-Ring, Stroke Shaft
36	32901	O-Ring, Motor Flange
37	32872	Shaft, Stroke adj.
38	37871	Drive Asm w/o Motor (M66 and M67)
38	37872	Drive Asm w/o Motor (M68)
Not Shown	31751	Oil, Renep Sintonep
Not Shown	38623	Pump Base Assembly

See Motor Controller Exploded View Drawing

Key No.	LMI P/N	LMI Description
1	37920	Housing
2	36739	Connector Assembly (4 Pin Connector)
3	33250	Filter, RFI
4	31632	Screw, Self Tapping (2)
5	33209	Latch
6	32186	Screw, 4-4- X .37 FH SS (2)
7	32187	Nut, 4-40 Flush Threads (2)
8	37907	Control Panel Assembly, 115V
8	37908	Control Panel Assembly, 230V
9	30709	Speed Knob
10	32395	Screw, Self Tapping (4)
11	31617	Cover
12	32352	O-Ring, Sponge
13	37500	Fuse Holder, 5X20mm
14	37499	Fuse, 5X20mm
15	33566	Terminal, Solder Lug
16	38192	Label, M Pump Warning

9.0 Series M Mechanical Metering Pump Exploded View

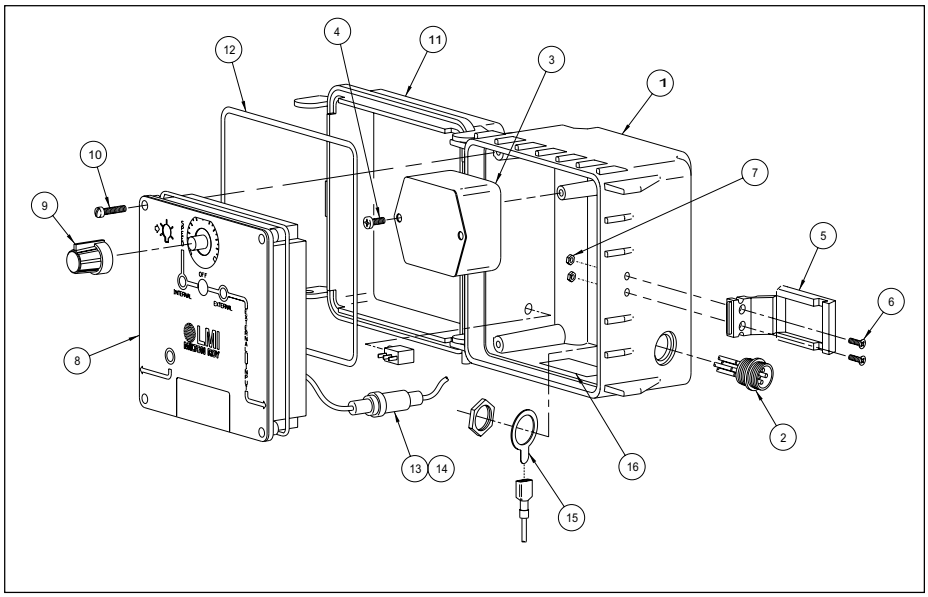

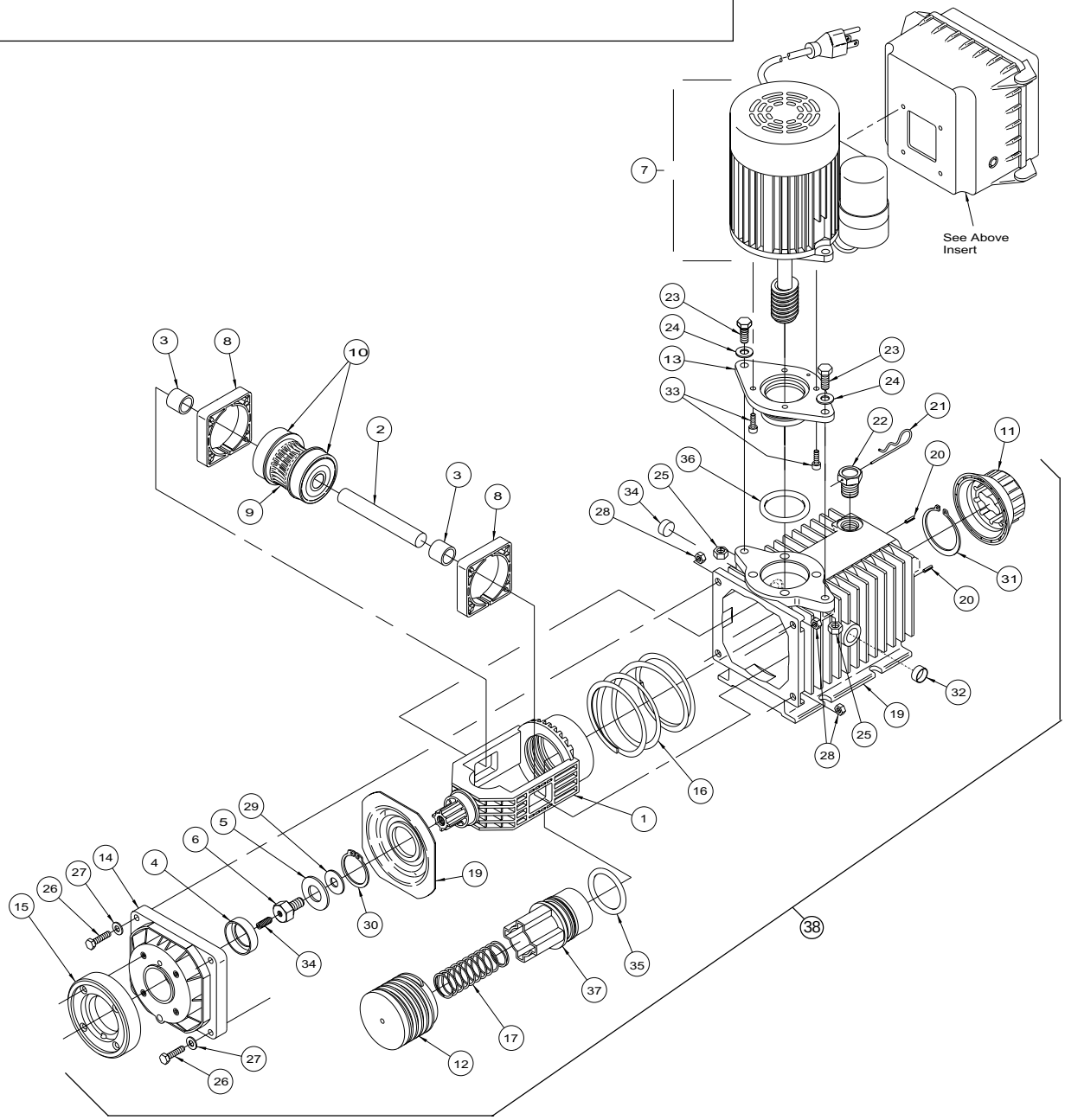

10.0 Troubleshooting Guide

CAUTION

Disconnect power to the controller before opening the front panel or removing the control panel! Troubleshooting and repair of a malfunctioning controller should only be attempted by qualified personnel using caution to insure safety and to limit further damage. Contact your local LMI distributor for assistance.

PROBLEM	CAUSE	SOLUTION
Solution drips from hole where Liquifram™ sets.	Liquifram is ruptured.	Replace Liquifram. See Replacement Instructions in maintenance section of this booklet.
Liquifram does not move.	Output adjustment knob is set at zero.	With pump running, rotate output adjustment knob to a higher setting.
	Defective motor.	Listen for motor rotation. Look for cooling fan rotation. Replace motor.
	Injection into excessive pressure.	Check system pressure against maximum pressure rating of pump. If discharge pressure is within 15 psi of pump's maximum rating, remove injection valve spring if supplied.
Liquifram moves but no solution is pumped.	Trapped air in pump head.	Operate pump at 100% output setting. Release pressure on pump discharge. Follow priming instructions in this booklet. Operate pump for a few minutes to purge head and valves of air.
	Suction lift is too high.	Reduce suction lift or arrange pump and tank for flooded suction installation.
	Loop in suction line permits air trap on suction side.	Straighten suction tubing.
	Improperly installed or dirty valve seats.	Using Liquid Handling Assembly instruction sheet clean and reassemble valves.
	Air in suction line.	Tighten suction valve fitting BY HAND. Replace if necessary. Check for air leaks throughout suction line.
Pumps air bubbles or air.	Suction tubing has leaks or pinholes.	Replace suction tubing.
	Improperly installed, or dirty valve seats.	Using Liquid Handling Assembly instruction sheets, clean and reassemble valves.
	Suction lift is too high.	Reduce suction lift or arrange pump and tank for flooded suction installation.
	Foot valve and strainer assembly is clogged.	Clean valve assembly.
Pump does not start under rated pressure.	Low voltage.	Increase voltage to pump's rated requirements.
	Pressure rise due to discharge line restriction or viscosity of solution.	Clean discharge line or dilute solution.
	Clogged injection valve or anti-syphon/pressure relief valve.	Using Liquid Handling Assembly instruction sheets, clean and reassemble valves.
Suction tubing collapses.	Foot valve and strainer assembly is clogged.	Using Liquid Handling Assembly instruction sheets, clean and reassemble valves.
Excessive pump output.	Output adjustment knob is set incorrectly.	With pump running, turn knob counter-clockwise until pump stops stroking. Line on knob should be directly over the 100% mark on the dial. If setting is off, adjust by following Output Adjustment Knob Setting instructions in this booklet.
	Very low pressure at injection point.	Install anti-syphon valve on pump.
	Excessive positive suction head	When flooded suction installation is used, chemical should be no more than 20 ft (6 m) above pump when using standard injection valve and zero discharge pressure.

11.0 Motor Controller Troubleshooting Guide

PROBLEM	POSSIBLE CAUSE	SOLUTION
No Internal or External light on front panel	Blown fuse	Disconnect power supply, remove control panel and check fuse; replace if necessary
	No power supplied	Check power source
	Loose/incorrect wiring	Verify wiring connection
No power to pump	Incorrect wiring	Check wiring
	Pump has failed	Plug pump directly into live outlet
Internal light stays ON and pump doens't come on	Speed set too low	Increase speed
	Pulser has failed	Replace pulser
Motor cycles erratically	Motor on-time adjustment set too high or too low	Readjust motor on-time
Pump is not responding to mA signal	Toggle switch set to Internal mode	Set toggle switch to External mode
	Wires are incorrectly connected	Check wires connections. 4-20 mA must maintain properly polarity
Empty light stays on	If level switch is used, check for low level in tank	Refill tank
	If level switch is not used, switch may be faulty	Consult factory

LMI
MILTON ROY

8 Post Office Square
Acton, MA 01720 USA
TOLL FREE: (800) 564-1097
TEL: (978) 263-9800
FAX: (978) 264-9172
http://www.lmipumps.com

© 2002 LMI Milton Roy - All Rights Reserved
Printed in USA
Specifications subject to change without notice.